TOYOTA

Technical Service BULLETIN

August 4, 2000

Title:

FUEL GAUGE INACCURACY

Models:

'99 – '00 4Runner

TSB

ELECTRICAL

EL010–00

Introduction

Some owners of 1999 and 2000 model year 4Runner vehicles may complain of fuel gauge operation problems. These complaints may include:

- The gauge reading will gradually change while driving or will show a different reading after cycling the ignition key **"OFF"** and then **"ON"**.
- The gauge will come off of **"FULL"** quickly.
- The perception that the fuel tank capacity is less than it should be, or differs from the capacity stated in sales literature.

To improve these concerns, a new Circuit Plate No. 3, fuel sender gauge and suction tube assemblies have been developed.

Applicable Vehicles

- **1999 – 2000** model year **4Runner** vehicles built between the VINs listed on the following page.

IMPORTANT NOTE:

- **Some 1999 vehicles have had the updated Circuit Plate No. 3 installed during production. Please see the Affected VIN Ranges section on the following page.**
- **Refer to the specified Repair Procedure in the Affected VIN Ranges before ordering ANY parts.**

Warranty Information

OP CODE	DESCRIPTION	TIME	OPN	T1	T2
830011	R & R Combination: Plate No. 3	0.4	83862–3D250 83861–3D280	73	71
832011	R & R Fuel Sender/Suction Tube Assemblies	0.7	83320–35590		43

Applicable Warranty*:

This repair is covered under the Toyota Basic Warranty. This warranty is in effect for 36 months or 36,000 miles, whichever occurs first, from the vehicle's in–service date.

* Warranty application is limited to correction of a problem based upon a customer's specific complaint.

Parts Information

PREVIOUS PART NUMBER	CURRENT PART NUMBER	PART NAME
83862–3D250	83862–3D251–RP*	Plate, Meter Circuit No. 3 (VZN18)
83861–3D280	83861–3D281–RP*	Plate, Meter Circuit No. 3 (RZN18)
83320–35530	83320–35590	Fuel Sender Gauge Assembly
77203–35460	77203–35461	Fuel Suction Tube Assembly
77169–60010	Same	Gasket, Fuel Suction Tube Set

*** IMPORTANT NOTE:**

Replacement of the No. 3 Circuit Plate will cause the odometer to be reset to zero. These parts must be ordered directly from the vendor. To order a part with the original vehicle mileage restored, please reference P.A.N.T. Bulletin 00–01.

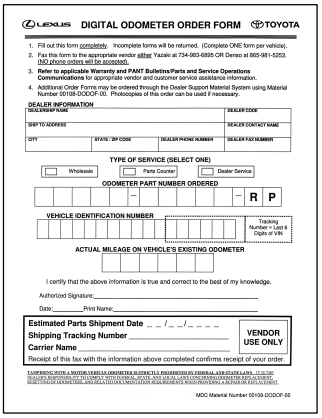

LEXUS DIGITAL ODOMETER ORDER FORM TOYOTA

1. Fill out this form completely. Incomplete forms will be returned. (Complete ONE form per vehicle).
2. Fax this form to the appropriate vendor either Yazaki at 734-983-6895 OR Denso at 865-981-5253. (NO phone orders will be accepted).
3. **Refer to applicable Warranty and P.ANT Bulletins/Parts and Service Operations Communications** for appropriate vendor and customer service assistance information.
4. Additional Order Forms may be ordered through the Dealer Support Material System using Material Number 00108-DODOF-00. Photocopies of this order can be used if necessary.

DEALER INFORMATION

DEALERSHIP NAME			DEALER CODE
SHIP TO ADDRESS			DEALER CONTACT NAME
CITY	STATE / ZIP CODE	DEALER PHONE NUMBER	DEALER FAX NUMBER

TYPE OF SERVICE (SELECT ONE)

☐ Wholesale ☐ Parts Counter ☐ Dealer Service

ODOMETER PART NUMBER ORDERED

– – R P

VEHICLE IDENTIFICATION NUMBER

Tracking Number = Last 6 Digits of VIN

ACTUAL MILEAGE ON VEHICLE'S EXISTING ODOMETER

I certify that the above information is true and correct to the best of my knowledge.

Authorized Signature:_____

Date:_____ Print Name:_____

Estimated Parts Shipment Date _ _ / _ _ / _ _ _ _

Shipping Tracking Number _____

Carrier Name _____

VENDOR USE ONLY

Receipt of this fax with the information above completed confirms receipt of your order.

TAMPERING WITH A MOTOR VEHICLE ODOMETER IS STRICTLY PROHIBITED BY FEDERAL AND STATE LAWS. IT IS THE DEALER RESPONSIBILITY TO COMPLY WITH FEDERAL, STATE, AND LOCAL LAWS CONCERNING TRADE-IN, REPLACEMENT, RESETTING OF ODOMETER, AND RELATED DOCUMENTATION REQUIREMENTS. WHEN PROVIDING A REPAIR OR REPLACEMENT.

NSDC Material Number 00108-DODOF-00

Affected VIN Ranges

Please refer to the following VIN ranges to determine the appropriate action.

MODEL	STARTING VIN	ENDING VIN	REPAIR PROCEDURE
RZN180	JT3GM84R*X0036573	JT3GN84R*X0049015	1 & 2
	JT3GM84R* X0049016	JT3GN84R*Y0066123	2
VZN180	JT3GN86R*X0092721	JT3GN86R*X0121833	1 & 2
	JT3GN86R*X0121834	JT3GN86R*Y0174590	2
VZN180	JT3GN87R*X0092721	JT3GN87R*X0121833	1 & 2
	JT3GN87R*X0121834	JT3GN87R*Y0174590	2
RZN185	JT3HM84R*X0030833	JT3HM84R*X0035956	1 & 2
	JT3HM84R*X0035957	JT3HM84R*Y0038813	2
VZN185	JT3HN86R*X0195037 (Tahara Plant)	JT3HN86R*X0238919	1 & 2
	JT3HN86R*X0238920 (Tahara Plant)	JT3HN86R*Y0317856	2
	JT3HN86R*X9018897 (Hino Plant)	JT3HN86R*X9028464	1 & 2
	JT3HN86R*X9028465 (Hino Plant)	JT3HN86R*Y9042410	2
VZN185	JT3HN87R*X0195037 (Tahara Plant)	JT3HN87R*X0238919	1 & 2
	JT3HN87R*X0238920 (Tahara Plant)	JT3HN87R*Y0317856	2
	JT3HN87R*X9018897 (Hino Plant)	JT3HN87R*X9028464	1 & 2
	JT3HN87R*X9028465 (Hino Plant)	JT3HN87R*Y9042410	2

Repair Procedure

1. Replace Combination Plate No. 3.

A. Verify that the replacement circuit board has been ordered with the correct vehicle mileage for that vehicle.
See important note on page 2.

B. Remove the combination meter assembly.

C. Remove Circuit Board No. 3.

D. Replace the circuit board with the new part.

E. Reassemble the combination meter assembly.

F. Remove the fuel tank.

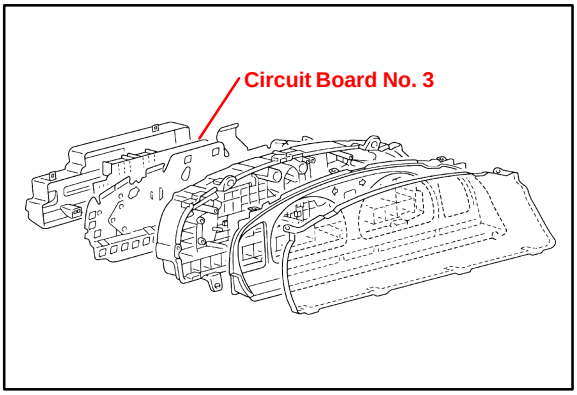

NOTE:
When removing a tank that is not empty, verify that the tank is secured to the support device, to prevent fuel spillage.

2. Replace Fuel Sender and Suction Tube Assemblies.

A. Remove the suction tube and fuel sender assembly.

B. Remove the fuel pump assembly.

NOTE:
This part will be reused.

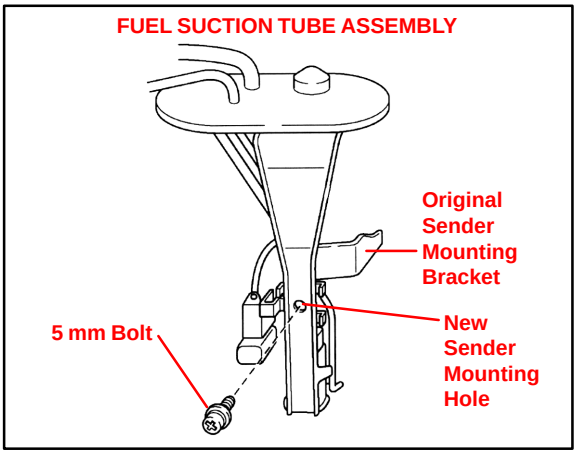

Repair Procedure (Continued)

C. Install the new fuel sender onto the new suction tube assembly. Align the hole of the fuel sender mounting bracket with the fuel pump bracket hole. Make sure that the bracket of the new fuel sender is butted up to the bottom of the original sender mounting bracket. Tighten the 5mm screw.

Torque: 1.8 – 2.2 N•m.

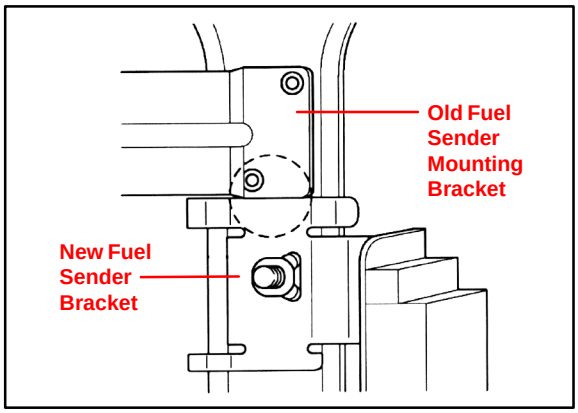

D. Reinstall the old fuel pump into the new bracket assembly.

E. Feed the wire harness between the fuel pump bracket and the fuel pipe, and connect the white connector.

F. Install the new assembly into the tank.

G. Perform the Fuel Gauge Calibration Procedure (See TSB EL010–99, dated December 24, 1999).

H. Verify correct gauge operation.