TOYOTA

Technical Service BULLETIN

August 3, 2005

Title:

BLOWER MOTOR ABNORMAL OPERATION

Models:

'03 – '05 4Runner

TSB

REVISED

AC004-05

HEATING & AIR CONDITIONING

TSB REVISION NOTICE:

- **September 12, 2005: The "Parts Identification" section has been updated.**

Previous versions of this TSB should be discarded.

Introduction

Some 2003 – 2005 model year 4Runner vehicles may experience a condition where the blower motor speed does not match the HVAC display indication. The blower motor controller has been modified to resolve this condition. Follow the repair procedure described in this TSB.

Applicable Vehicles

- **2003 – 2005** model year **4Runner** vehicles produced **BEFORE** the Production Change Effective VINs shown on page 2.

Warranty Information

OP CODE	DESCRIPTION	TIME	OFP	T1	T2
AC5003	R & R Blower Motor Controller	0.6	87165–13010	72	17

Applicable Warranty*:

This repair is covered under the Toyota Comprehensive Warranty. This warranty is in effect for 36 months or 36,000 miles, whichever occurs first, from the vehicle's in-service date.

* Warranty application is limited to correction of a problem based upon a customer's specific complaint.

Production Change Information

PLANT	PRODUCTION CHANGE EFFECTIVE VIN
Tahara	JTEZT14R*50021434
	JTEZT17R*50021445
	JTEBT14R*50049429
	JTEBT17R*50049446
	JTEZU14R*50056705
	JTEZU17R*50056704
	JTEBU14*50068373
	JTEBU17R*50068397
Hino	JTEZT14R*58006730
	JTEZT17R*58006732
	JTEBT14R*58023054
	JTEBT17R*58023046
	JTEZU14R*58033837
	JTEZU17R*58033901
	JTEBU14R*58044478
	JTEBU17R*58044471

Parts Information

PREVIOUS PART NUMBER	CURRENT PART NUMBER	PART NAME	QTY
87165–13010*	Same	Control, Blower Motor	1

* The part number remains unchanged. Refer to Parts Identification.

Parts Identification

Countermeasure service parts are identified by the 4–digit date code printed on the side of the blower motor controller cooling fins. Date code is 2 G 17or later.

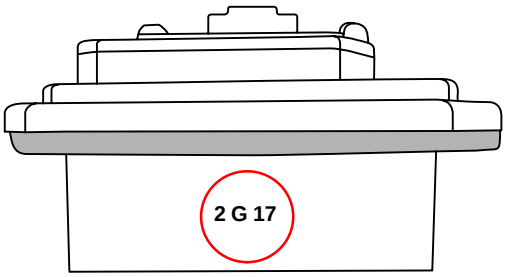

Service Part Identification: 2 G 17

Month	Year	Day
1: Jan.	G: 2005	01: 1
2: Feb.		02: 2
3: Mar.		03: 3
4: Apr.		04: 4
5: May		05: 5
6: June		.
7: July		.
8: Aug.		.
9: Sept.		17:17
10: Oct.		
11: Nov.		
12: Dec.		

Components

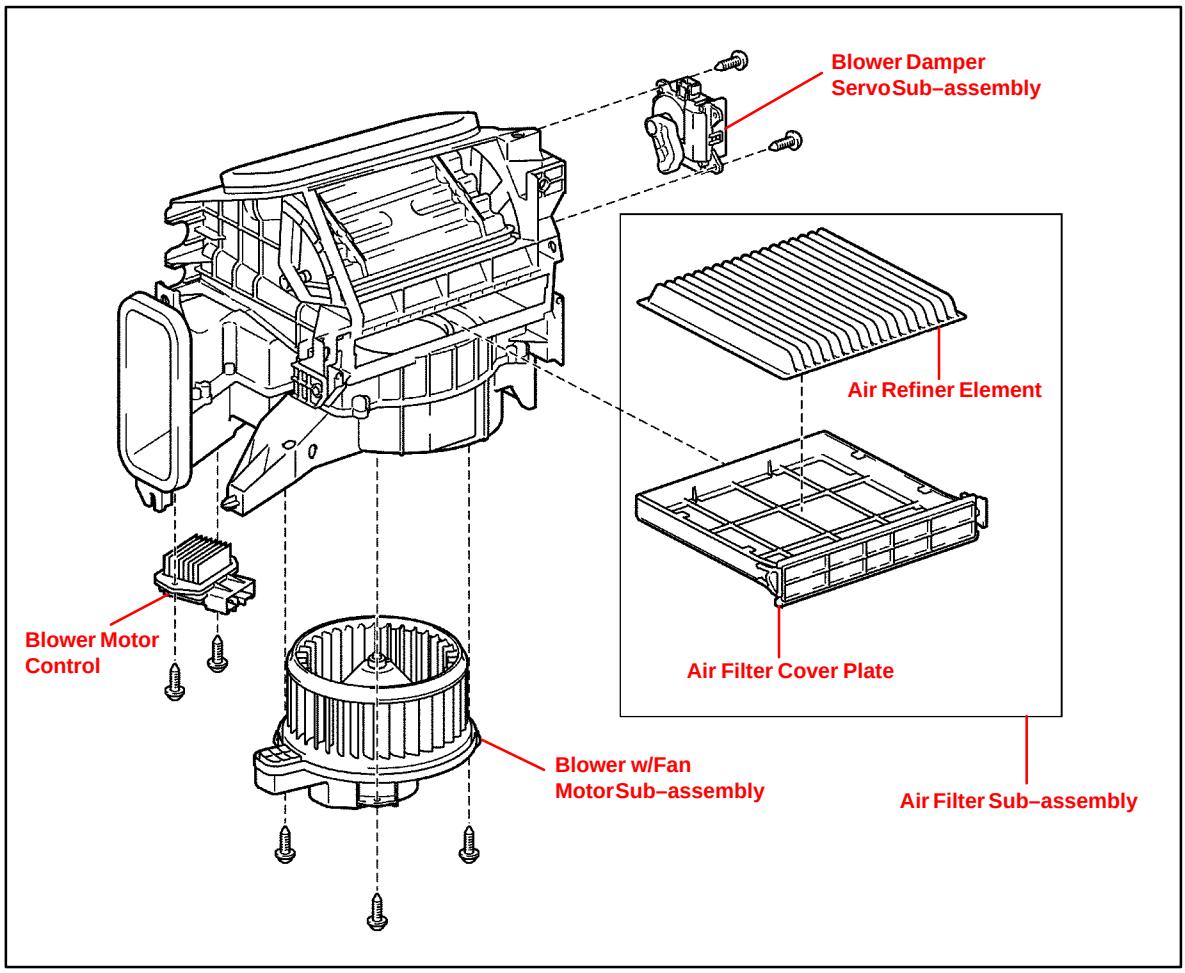

Repair Procedure

1. Remove the negative (–) battery terminal.

> **NOTE:**
> **Failure to complete step "1" above may result in internal damage to the transfer case shifting mechanism.**

2. Remove the instrument panel under cover sub-assembly No. 2.
   A. Remove the screw.
   B. Disengage the 3 clips.

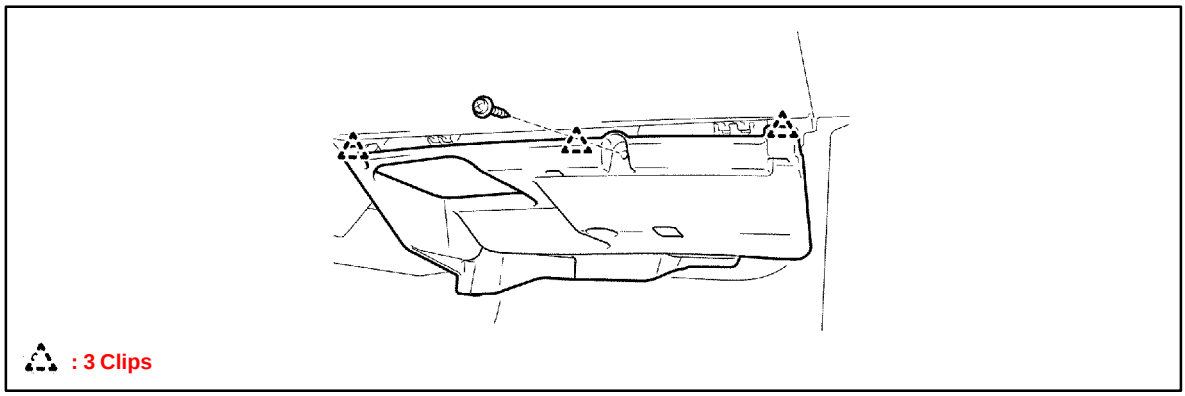

Repair Procedure (Continued)

C. Disconnect the wire harness from the 4WD computer.

D. Remove the instrument panel under cover sub-assembly No. 2.

3. Remove the blower motor controller.
   A. Disconnect the wire harness connector.
   B. Remove the two retaining screws.
   C. Remove the blower motor controller from the HVAC module.

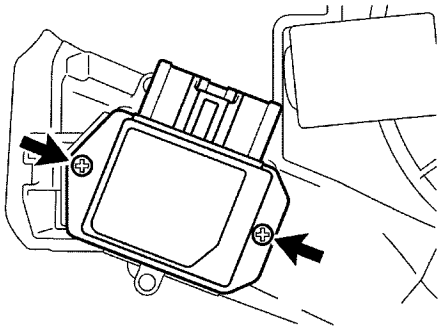

4. Install the NEW blower motor controller.
   A. Insert the blower motor controller into the HVAC module.
   B. Install the two retaining screws.
   C. Connect the wire harness.
5. Reconnect the 4WD computer.
6. Install the instrument panel under cover sub-assembly No. 2.
7. Reconnect the negative (–) battery terminal.
8. Confirm proper blower motor operation and speed control.
9. Re-initialize all power systems per TSB No. PD008-05, *"Power System Initialization During PDS."*